Technical Report Documentation Page

1. Report No.	2. Government Accession No.	3. Recipient's Catalog No.
FHWA/TX-0-4098-1		

4. Title and Subtitle	5. Report Date
Restrained Shrinkage Cracking of Concrete Bridge Decks: State-of-the-Art Review	June 11, 2001
7. Author(s)	6. Performing Organization Code
Michael D. Brown, Greg Sellers, Dr. Kevin Folliard, Dr. David Fowler	8. Performing Organization Report No.
	4098-1
9. Performing Organization Name and Address	10. Work Unit No. (TRAIS)
Center for Transportation Research The University of Texas at Austin 3208 Red River, Suite 200 Austin, TX 78705-2650	11. Contract or Grant No. 0-4098
12. Sponsoring Agency Name and Address	13. Type of Report and Period Covered State-of –the-Art Review
Texas Department of Transportation Research and Technology Implementation Office P.O. Box 5080 Austin, TX 78763-5080	14. Sponsoring Agency Code

15. Supplementary Notes
Project conducted in co-operation with the U.S. Department of Transportation, Federal Highway Administration, and the Texas Department of Transportation.

16. Abstract: In the United States, restrained shrinkage cracking is a significant durability problem. The issues affecting restrained shrinkage cracking arise from design and construction practices, as well as material properties. The mechanisms of drying, autogenous, and carbonation shrinkage are presented and discussed along with related creep issues. Thermal stresses also play a role in bridge deck cracking. These stresses result from the heat of hydration, diurnal temperature changes, and solar radiation. Current and proposed test methods are introduced and evaluated. Both conventional and innovative methods of controlling drying shrinkage are presented. Some innovative materials are discussed, including: fibers, shrinkage-compensating concrete, shrinkage-reducing admixtures, and extensible concrete. The use of innovative materials combined with improved design and construction practices can eliminate restrained shrinkage cracking.

17. Key Words	18. Distribution Statement
Decks, shrinkage, cracking, concrete	No restrictions. This document is available to the public through the National Technical Information Service, Springfield, Virginia 22161.

19. Security Classif. (of report)	20. Security Classif. (of this page)	21. No. of pages	22. Price
Unclassified	Unclassified	60 plus appendix	

Form DOT F 1700.7 (8-72) Reproduction of completed page authorized

RESTRAINED SHRINKAGE CRACKING OF CONCRETE BRIDGE DECKS: STATE-OF-THE-ART REVIEW

by

Michael Brown
Gregory Sellers
Dr. Kevin J. Folliard
Dr. David W. Fowler

Research Project 0-4098
Restrained Shrinkage Cracking of Concrete Bridge Decks

Conducted for the

TEXAS DEPARTMENT OF TRANSPORTATION

by the

CENTER FOR TRANSPORTATION RESEARCH
Bureau of Engineering Research
THE UNIVERSITY OF TEXAS AT AUSTIN

June 2001

DISCLAIMERS

The contents of this report reflect the views of the authors, who are responsible for the facts and the accuracy of the data presented herein. The contents do not necessarily reflect the official views or policies of the Federal Highway Administration or the Texas Department of Transportation. This report does not constitute a standard, specification, or regulation.

There was no invention or discovery conceived or first actually reduced to practice in the course of or under this contract, including any art, method, process, machine, manufacture, design or composition of matter, or any new and useful improvement thereof, or any variety of plant, which is or may be patentable under the patent laws of the United States of America or any foreign country.

NOT INTENDED FOR CONSTRUCTION,
BIDDING, OR PERMIT PURPOSES

Kevin J. Folliard
Research Supervisor

ACKNOWLEDGMENTS

Research performed in cooperation with the Texas Department of Transportation and the U.S. Department of Transportation.

TABLE OF CONTENTS

Chapter 1 Introduction **1**
Chapter 2 Restrained Shrinkage Cracking **5**
Types of Shrinkage 5
Plastic Shrinkage 5
Autogeneous Shrinkage 5
Drying Shrinkage 6
Carbonation Shrinkage 6
Combined Effects of Creep and Drying Shrinkage 6
Thermal Stresses 7
Heat of Hydration 7
Ambient Thermal Cycles 8
Restraint 8
Chapter 3 Test Methods and Specifications **9**
Fresh Concrete Tests 10
Hardened Concrete Tests 10
Modulus of Elasticity and Creep 11
Free and Restrained Shrinkage 12
Restrained Expansion of Shrinkage-Compensating Cement 14
Chloride Permeability 15
Additional Restrained Shrinkage Tests 15
Fracture Energy 16
Summary of Test Methods 17
Chapter 4 Bridge Deck Cracking **19**
Stresses in Transverse Deck Cracking 19
Restraint 19
Thermal Stresses 19
Shrinkage Stresses 20
Traffic Stresses 20
Design Issues 20
Span Support and Continuity 21
Girder Effects 21
Deck Design 21
Concrete Strength 23
Concrete Properties and Mix Proportions 23
Mixture Proportions 23
Modulus of Elasticity and Creep 23
Concrete Strength 24
Aggregate 24
Cement Type 24
Silica Fume 24

Admixtures 25
Fiber Reinforcement 25
High-Performance Concrete 26
Concrete Placement 29
Weather and Time of Placement 29
Finishing 30
Curing 30
Plastic Shrinkage Cracking 30
Continuous Moist Curing 30
Membrane Curing 31
Chapter 5 Methods of Controlling Shrinkage Cracking 33
Conventional Methods 34
Aggregates 34
Cement Content and Type 35
Admixtures 36
Construction Techniques 37
Innovative Methods 38
Fiber-Reinforced Concrete 38
Shrinkage-Reducing Admixtures 39
Shrinkage-Compensating Concrete 39
Extensible Concrete 40
Chapter 6 Conclusions 43
References 45
Appendix A ASTM and AASHTO Test Specifications 49

LIST OF ILLUSTRATIONS

Figure 1 – Causes of bridge deck cracking 2
Figure 2 – Time dependence of restrained shrinkage and creep 7
Figure 3 – Proposed tensile creep frame 12
Figure 4 – Diagrams of ring specimen 13
Figure 5 – Cracking frame 16
Figure 6 – Transverse deck crack 22
Figure 7 – Continuous moist curing 31
Figure 8 – Polypropylene fibers 38

Table 1 – Laboratory test methods selected for study 9
Table 2 – Factors affecting deck restraint 28
Table 3 – Methods of controlling drying shrinkage 34
Table 4 – Aggregate type related to drying shrinkage 35

CHAPTER 1 INTRODUCTION

Cracking in concrete is a major concern, particularly with bridge decks, because it can lead to premature deterioration. According to a recent survey from respondents in the state departments of transportation (DOTs), more than 100,000 bridge decks in the United States have suffered from early transverse cracking (Krauss and Rogalla 1996). This study also found that the most important factors affecting the cracking in bridge decks are the concrete properties of decks. Other factors such as the girder type, span length, construction techniques (e.g., precast concrete panels), and detailing issues can also cause drying shrinkage cracking in bridge decks.

In order to determine the causes of transverse cracking problems that result from restrained shrinkage cracking, we must understand the actual mechanisms driving this type of cracking behavior. This report first discusses drying shrinkage and creep in detail, focusing on how either of these mechanisms can either contribute to or help reduce restrained shrinkage cracking. In addition to drying shrinkage, a number of different types of shrinkage can contribute to the development of cracking and durability concerns in concrete. These include plastic, autogenous, and carbonation shrinkage. The report also explains how differences in the heat of hydration can subsequently lead to thermal stresses. Once the shrinkage of concrete occurs, external forces, such as adjoining structural members, will immediately restrain this shrinkage causing additional stresses to occur in the concrete. The shrinkage that concrete bridge decks undergo will be restrained at the ends by the supporting girders, placing large amounts of tensile stresses on these decks. The major causes of bridge deck cracking are illustrated in Figure 1.

Certain test methods must be administered in order to accurately describe concrete mixture proportions and the behavior of concrete when subjected to restrained shrinkage cracking. Included in this report are American Society of Testing and Materials (ASTM) and American Association of State Highway and Transportation Officials (AASHTO) test methods and specifications that, when implemented correctly in the laboratory, can be used to analyze the behavior of concrete as applied to shrinkage in structural applications. Réunion Internationale des Laboratoires d'Essais et de recherche sur les Matériaux et les Constructions (RILEM) test methods are also mentioned, along with a

variety of different restrained shrinkage tests that have been developed and have proven to be good predictors of restrained shrinkage cracking of different concrete mixture proportions. We also refer to two American Concrete Institute (ACI) committee reports that deal with some of the specific topics of restrained shrinkage cracking, including creep and shrinkage analysis, along with detailed descriptions regarding shrinkage-compensating concrete.

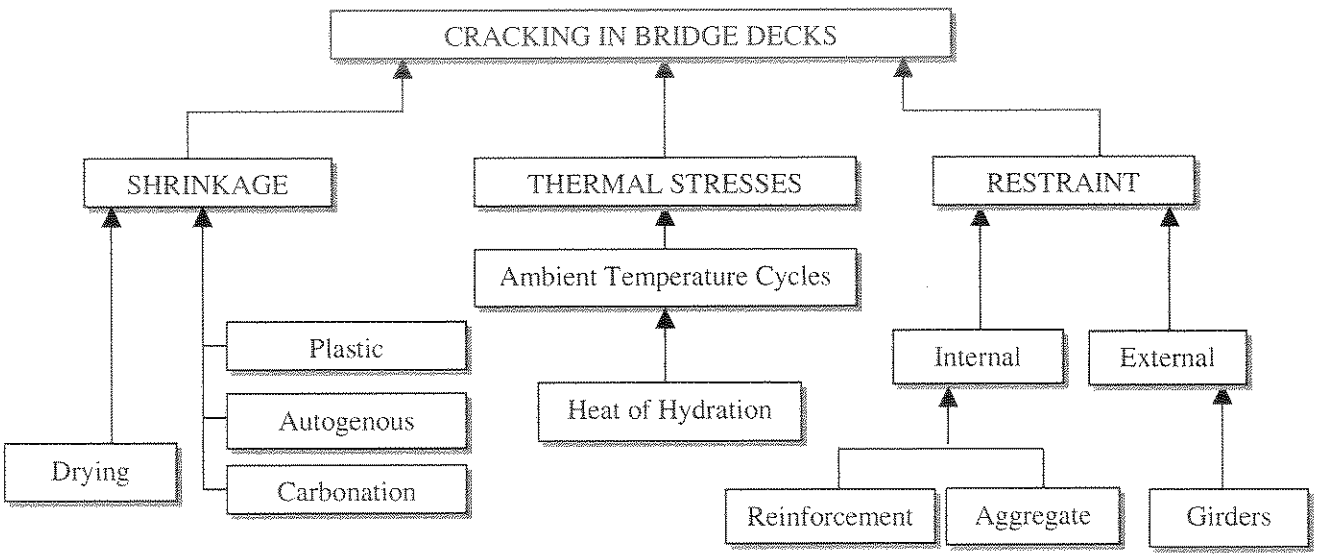

Figure 1 – Causes of bridge deck cracking

Once the applicable test methods and specifications have been covered, the topic of bridge deck cracking is addressed. One of the topics deals with transverse deck cracking caused by stresses originating from a number of different sources. Design issues of the bridge decks are included, with the girder type and the support of the deck at the ends of the spans taken into consideration. The influence of different concrete properties and mixture proportions of the deck are subsequently described. This section includes a discussion of the increased use of high-performance concrete (HPC), specifically for bridge decks, which has been found to increase the frequency and severity of transverse cracking. It also covers construction techniques such as concrete placement and curing.

The last section of this report deals with the question of how to control shrinkage cracking. Two methods of control are presented: conventional and innovative. The conventional methods include proper selection of materials and concrete mixtures, along

with good construction techniques. Because it is nearly impossible to control the conventional methods to produce a concrete mixture that will not crack, especially because of the extreme number of variations that can occur, innovative methods must also be used to help reduce the amount of restrained shrinkage cracking. These methods include the use of fiber-reinforced concrete, the addition of shrinkage-reducing admixtures to concrete, the use of shrinkage-compensating cement, and the development of extensible concrete.

In the conclusion of this report, we make recommendations concerning the methods by which restrained shrinkage cracking in bridge decks can be tested and predicted.

CHAPTER 2 RESTRAINED SHRINKAGE CRACKING

Restrained shrinkage cracking occurs when concrete is prevented from making volumetric changes by a source of restraint. Volumetric changes in concrete result from creep, shrinkage of the concrete, or thermal loads.

TYPES OF SHRINKAGE

Plastic Shrinkage

Plastic shrinkage occurs only in fresh concrete. The most common mechanism is the evaporation of water from the surface of the plastic concrete. However, the loss of water through the sub-base or formwork can exacerbate the effects of surface evaporation.

In the fresh concrete the particles are completely surrounded by water. If water is removed from the system, menisci are formed between particles. These menisci generate negative capillary pressure, which pulls the cement particles together. By pulling on the particles, the capillary stresses tend to reduce the volume of the cement paste. Capillary pressures continue to rise as water is lost at the surface of the concrete. When the pressures reach a critical value, the water that remains in the concrete rearranges to form discrete zones with voids between them. Plastic shrinkage cracking occurs at this point.

Autogenous Shrinkage

Autogenous shrinkage is a result of self-desiccation of the concrete. When no additional water is added to the concrete through curing, the concrete begins to chemically consume the water during hydration. Autogenous shrinkage is much more pronounced in concrete mixtures with a low water-cement ratio.

Autogenous shrinkage is significantly increased by the use of superfines such as silica fume. Paillere et al. (1989) tested a sealed concrete specimen in a restrained shrinkage apparatus. When a specimen with a 0.44-water-cement concrete was sealed, no failure resulting from shrinkage stresses occurred. However, when a specimen with high-range water-reducing admixture (HRWRA) and silica fume, but with the same cement content, was tested, cracking occurred in less than 4 days. In the second specimen the water-cement ratio had dropped to 0.26 because of the use of the HRWRA. Traditionally, autogenous shrinkage has been viewed as though it were of secondary importance. In

more modern mixes containing HRWRA and superfines, this type of shrinkage can be a dominant influence on cracking.

Drying Shrinkage

There are three main mechanisms of drying shrinkage: capillary stress, disjoining pressure, and surface tension. Each of these mechanisms is dominant in a different range of relative humidity. The most relevant range of relative humidities for field conditions is 45%-90%. In this range the capillary stress mechanism is the most dominant.

As water evaporates, the tensile stresses that were confined to the surface tension of the water are transferred to the walls of the capillary pores (<50 nm). The tension in the capillary walls results in shrinkage of the concrete.

Carbonation Shrinkage

Hardened cement paste will chemically react with carbon dioxide (CO_2). The amount present in the atmosphere is enough to cause considerable reaction over long periods of time. The extent to which concrete can react with the CO_2 is a function of relative humidity. At high relative humidities the concrete pores near the exposed surface are mostly filled with water; the water prevents the ingress of carbon dioxide and thus limits the reaction. Concrete exposed to CO_2 loses water and behaves as though it were exposed to drying conditions, in other words, the concrete will behave as though it were exposed to a lower atmospheric relative humidity than actually exists.

Combined Effects of Creep and Drying Shrinkage

The primary cause of both creep and drying shrinkage is the loss of adsorbed water, though the causes of the water loss are radically different. For drying shrinkage the driving force behind the water loss is the relative humidity, and for creep it is applied sustained stress. Restrained shrinkage induces tensile stresses in concrete. Creep causes the concrete to flow in very small amounts and can serve to relax shrinkage stresses. Figure 2 illustrates the process described above and shows the delay in cracking that result from stress relaxation.

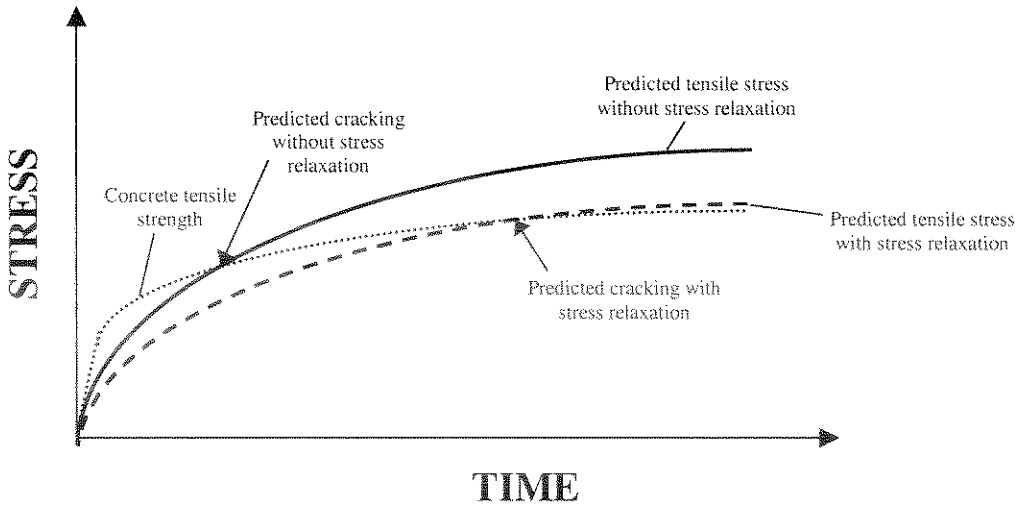

Figure 2 – Time dependence of restrained shrinkage and creep (Mehta 1993)

THERMAL STRESSES

Under field conditions, a bridge will be subjected to temperature cycles. These cycles occur on a daily and seasonal cycle. Ambient temperature cycles are most important after the concrete has hardened. However, while the concrete is still plastic, the thermal loads will be applied from the heat of hydration produced within the concrete placement.

Heat of Hydration

The heat of hydration produces the first thermal load on the concrete member. As the fresh concrete hydrates and gains strength, the exothermic chemical reaction produces heat within the concrete placement. The temperature of the concrete slowly drops to match ambient conditions as hydration proceeds. This process is proportional to the size of the concrete member; larger members take longer to cool to ambient temperatures. The plastic concrete can accommodate thermal loads without developing thermal stresses; after hardening, any thermal load restrained against length change will induce stresses. Thermal stresses will be the highest if the concrete hardens when it is at its highest temperature by forcing the stress-free state to be at an elevated temperature. As a result, the average temperature that the deck experiences will be lower than the environment in which the deck hardened, causing a volume contraction throughout the life of the deck.

Ambient Thermal Cycles

After hydration is complete, the weather determines the temperature and thermal stresses. The typical diurnal weather cycle begins with the coolest temperature occurring just before sunrise. The temperature then rises throughout the day and peaks a few hours before sunset. Cloud cover and precipitation affect this cycle and can cause dramatically different cooling and heating rates.

In addition to diurnal cycles, solar radiation is a large source of thermal loading. Concrete will absorb part of the solar radiation and reflect the rest. Asphalt overlays are typically darker in color than portland cement concretes (PCCs) and thus absorb more solar radiation. However, the asphalt tends to insulate the concrete and reduce its thermal load.

Wind tends to reduce the temperature on the member by inducing heat transport with bulk fluid motion, or convection. Convection cools concrete surfaces, reducing the peak temperatures caused by the sun.

RESTRAINT

Strain alone, caused by shrinkage, creep, or thermal loading, does not induce stresses. The forces and pressures provided by restraint cause stress. The restraint can be internal, from reinforcement and aggregate, or external, from the sub-base or superstructure of a bridge. If strains are not uniform throughout a member, as though produced by a thermal gradient, the member itself can serve as a restraint. If the concrete is subjected to shrinkage, the restraint will cause tensile stresses, which tend to create cracks.

Bridge decks are particularly susceptible to such restraint. Most bridge decks are composite with the girders that support them. This composite action can increase the restraint if the girders do not undergo shrinkage and thermal strains that are identical to those of the deck. Dissimilar thermal strain characteristics will be more pronounced if steel girders support the concrete deck.

CHAPTER 3 TEST METHODS AND SPECIFICATIONS

In order to accurately measure the concrete properties affecting restrained shrinkage cracking, researchers must administer specific tests in accordance with ASTM/AASHTO specifications, along with possible additional tests from other governing bodies, such as RILEM. The necessary tests include basic concrete tests that must be conducted for quality control purposes. In addition to conducting the necessary tests, the researchers should examine procedures from ACI test reports, specifically for analysis of creep and shrinkage results, along with a report concerning shrinkage-compensating cement. Overall, these tests can be divided into two categories, fresh concrete properties and hardened concrete properties, which are summarized in Table 1 below.

Table 1 – Laboratory test methods selected for study

TEST METHODS	**DESCRIPTION**
Fresh Concrete Properties	
AASHTO T 119	Slump of Concrete
AASHTO T 152	Air Content
ASTM C 138	Unit Weight, Yield and Air Content
ASTM C 1064	Temperature of Fresh Concrete
Hardened Concrete Properties	
AASHTO T 22	Compressive Strength of Concrete
AASHTO T 198	Splitting Tensile Strength of Concrete
AASHTO T 97	Flexural Strength of Concrete
ASTM C 1074	Estimating Concrete Strength by the Maturity Method
ASTM C 469	Modulus of Elasticity of Concrete
ASTM C 512	Creep of Concrete in Compression
AASHTO T 160	Drying Shrinkage of Concrete (Free Shrinkage)
AASHTO PP34-99	Restrained Shrinkage Cracking of Concrete
ASTM C 878	Restrained Expansion of Shrinkage-Compensating Concrete
AASHTO T 277	Rapid Chloride Permeability

Fresh Concrete Tests

The fresh concrete tests are administered for quality control purposes to compare the concrete mixes when researchers are evaluating and testing for shrinkage cracking. The tests, listed below, also list in parentheses the specification number designated by ASTM and AASHTO:

- Slump of Concrete (AASHTO T 119)
- Air Content (AASHTO T 152)
- Unit Weight, Yield and Air Content (ASTM C 138)
- Temperature of Fresh Concrete (ASTM C 1064)

Hardened Concrete Tests

A number of hardened concrete tests must be administered for analysis of the drying shrinkage and cracking tendencies of a concrete specimen. The first four tests listed determine the strength of the concrete specimen, while the rest of the tests are needed for modeling the shrinkage behavior of concrete and are described in detail below. Included in the strength tests is the maturity method test, which establishes a relationship between strength and maturity while also determining the temperature history of the concrete for which strength is to be estimated. Once these tests have been administered and the results have been analyzed, the drying shrinkage and cracking characteristics of the concrete specimens can be obtained. The hardened concrete tests include the following:

- Compressive Strength of Concrete (AASHTO T 22)
- Splitting Tensile Strength of Concrete (AASHTO T 198)
- Flexural Strength of Concrete (AASHTO T 97)
- Estimating Concrete Strength by the Maturity Method (ASTM C 1074)
- Modulus of Elasticity of Concrete (ASTM C 469)
- Creep of Concrete in Compression (ASTM C 512)
- Drying Shrinkage of Concrete (Free Shrinkage) (AASHTO T 160)
- Restrained Shrinkage Cracking of Concrete (AASHTO PP34-99)
- Restrained Expansion of Shrinkage-Compensating Concrete (ASTM C 878)
- Rapid Chloride Permeability (AASHTO T 277)

Modulus of Elasticity and Creep

The modulus of elasticity is vital to our understanding and modeling of the shrinkage behavior of concrete. This test is administered by applying a specific stress at different times to a concrete cylinder and then measuring the strain at these stress values. Subsequently, the modulus of elasticity can be found by using the stress-strain relationship of concrete. In the National Cooperative Highway Research Program (NCHRP) Report 380 (Krauss and Rogalla 1996), the effective modulus of elasticity property of concrete is one of the three factors that control the cracking of bridge decks. The paper goes on to say that "the concrete effective modulus of elasticity significantly affects tensile stress in the deck and cracking" (pg. 39). As discussed earlier, restraint in bridge decks causes tensile stresses in the concrete, which in turn lead to shrinkage cracking.

In addition to the modulus of elasticity test, the creep of concrete in compression test is very important. In this test, concrete cylinders are placed in a vertical loading frame as constant load is applied in direct compression over an extended amount of time. Strain readings are taken before and after loading, and subsequently the creep strain and creep rate can be obtained from these readings. In the same NCHRP report mentioned earlier, creep is defined as the one property of concrete that has the largest impact on long-term stresses and transverse cracking in bridge decks. Creep is closely related to the compressive strength of concrete by the fact that once the compressive strength of concrete increases, creep decreases by an amount greater than both the modulus of elasticity and the tensile strength increase. This is crucial to transverse bridge deck cracking because the tensile stresses that are usually reduced by creep will now be greater than the tensile strength of concrete, leading to transverse cracking (refer to Figure 2).

Because the tensile stresses and strengths of concrete are of great significance for bridge decks, increasing interest has been directed toward the idea that concrete creeps in tension. Poston et al. (1998) developed a test in which concrete cylinders are loaded in direct tension by applying a constant load acting across an adjustable lever arm. Because this frame did not provide accurate results, Poston et al. suggested a different type of tensile creep frame that, if conducted properly, should provide valuable information concerning creep in tension (refer to Figure 3).

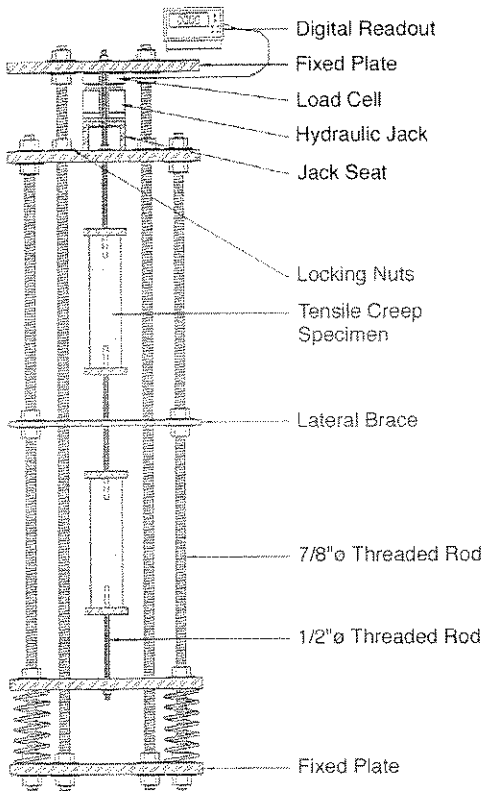

Figure 3 – Proposed tensile creep frame (Poston 1998)

A source of information about the analysis and prediction of shrinkage cracking that takes into account the effects of creep is the ACI Committee 209 report (1999). This report presents recommendations regarding shrinkage and creep behavior analysis, taking into account a variety of factors dealing with the size of the concrete members, construction techniques, and many other issues. This report should be followed and utilized in order to compare the predicted shrinkage cracking with the values obtained from the restrained shrinkage tests, described below.

Free and Restrained Shrinkage

The drying (free) shrinkage test should be administered to determine the actual shrinkage of the concrete without any restraint applied. The test consists of casting a concrete beam and measuring the displacement on two ends as a direct relation to the time elapsed after stripping the molds.

A relatively new test method known as the ring test has been designed to measure the tendency of concrete to undergo drying shrinkage cracking and has now been adopted by AASHTO as a provisional test method. The setup for the test and an illustration of the casting method can be seen in Figure 4. This restrained shrinkage test, which was utilized as part of the NCHRP Project C 12-37, has been developed by a number of researchers in the past (Weiss et al. 1998, ref. 22, Folliard and Berke 1997) as an accurate method for predicting the length of time until the concrete cracks. Weiss et al. (1998, ref. 23) contend that this test solves the problem that arises when researchers perform a direct tensile test on a concrete specimen while analyzing the specimen for any tensile stresses being developed due to restraint.

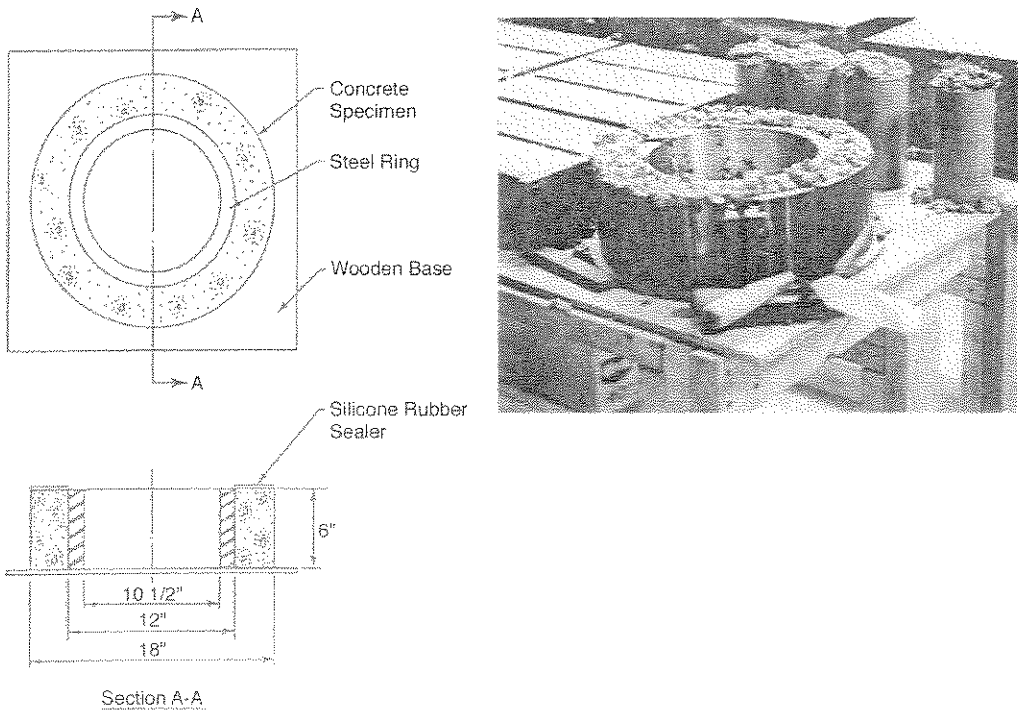

Figure 4 – Diagrams of ring specimen (Shah, 1997 and Poston, 1998)

The test method consists of casting a 3 in. thick concrete ring around the perimeter of a steel ring, then moist curing the specimen, and subsequently placing the rings in an environmentally controlled chamber at a temperature of 72 °F, with 50% relative humidity. The concrete is then subjected to extremely high levels of restraint against shrinkage, provided by the steel. Thus, the ring test represents a worst-case scenario for concrete when dealing with shrinkage cracking. Weiss et al. (1998) notes that the test

method avoids eccentricities being developed in the concrete specimen, creating a more realistic method of direct tensile restraint. Strain gages, attached to the inside of the steel ring, measure the amount of time that passes before the concrete breaks to relieve stress along the steel ring. In addition to measuring the amount of time until the concrete cracks, the procedure also allows for the total crack area of the concrete ring to be measured once the test has been concluded. Along with the free shrinkage test, the different concrete mixtures can be compared and analyzed for the actual restrained shrinkage tendencies of each mixture.

Restrained Expansion of Shrinkage-Compensating Cement

Shrinkage-compensating cement is an innovative material that has received considerable attention for its ability to control drying shrinkage in concrete. The restrained expansion test examines both the expansion and contraction of a concrete beam specimen containing shrinkage-compensating cement during moist-curing and dry storage phases. The specimen is restrained by a cage consisting of a steel threaded rod running through the mold and secured to the ends of the beam by steel plates and bolts.

In addition to the restrained expansion test, the afore-mentioned ring test can be used to determine the cracking tendencies of shrinkage-compensating concrete by measuring the amount of time (in days) until the specimen cracks. A critical factor for this test is the placement of molds that are strong enough to confine the shrinkage-compensating concrete and initially place the specimen into compression. This method will provide insight into the behavior of shrinkage-compensating concrete as applied to recommended construction techniques for this material.

Along with these tests, the ACI Committee 223 Report (1998) is a standard practice that sets forth recommendations for proportioning, mixing, placing, finishing, curing, and testing shrinkage-compensating concrete in structures. It specifically mentions the topic of curing and applying adequate protection to the concrete during the early stages of hydration. This report can be a useful source of information for researchers testing shrinkage-compensating cement and interpreting the results.

Chloride Permeability

The permeability of concrete bridge decks is one of many concerns that have to do with transverse cracks developing and propagating throughout the depth of the decks themselves. Burrows (1998) states that "the rapid corrosion of reinforcing steel in concrete resulting from chloride ions is a pervasive worldwide problem" (pg. 48). Specifically, the overall durability of a bridge deck can be substantially damaged if transverse cracks develop and the deck is subjected to sources of chloride (e.g. sea water, deicing salt). The rapid chloride permeability test uses electricity that forces chloride ions to penetrate through the concrete; subsequently the charge passed through the sample can be measured and correlated to the actual penetration water or other ions into the concrete. Therefore, this test allows for comparison of the durability of different concrete mix proportions, based on the permeability of the concrete.

Additional Restrained Shrinkage Tests

Numerous restrained shrinkage tests have been developed in addition to the provisional ring test described above. Springenschmid (1994) has performed extensive research and developed a cracking frame, as seen in Figure 5, to examine restrained shrinkage of concrete and RILEM has since adopted this test as a standard test, designated TC 119. According to Breitenbücher (1990), the frame is able to restrain both contraction and expansion in the longitudinal direction of the concrete member, while restraint stresses are measured continuously. This restraint closely resembles restraint conditions imposed by girders to the concrete bridge decks. The actual test consists of insulating a concrete bar and surrounding the formwork with two steel bars running longitudinally and two steel cross-heads at each end. The concrete is allowed to cool to ambient temperature, and after four days, if the concrete has not cracked, it is cooled at a constant rate until cracking occurs. Thus, the temperature at which the concrete cracks indicates how well the concrete will resist cracking in practical applications, such as bridge decks. Concrete that cracks at higher temperatures in this test is prone to early cracking.

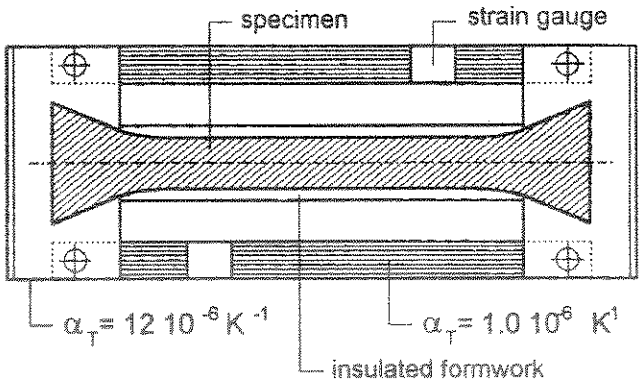

Figure 5 – Cracking frame (Breitenbücher 1990)

Poston et al. (1998) has examined two additional tests that pertain to restrained shrinkage cracking in concrete. The first test involves casting a concrete beam specimen against a thin steel plate on the bottom of the specimen. Under standard conditions, the beam deflects upward at the unrestrained end. This upward tip deflection is measured at three locations over a certain period of time. The interaction between the beam and the steel plate, which is impregnated with sand grit to improve the bond to the concrete, represents the restraint to the concrete specimen.

The German angle test was also investigated as a possible candidate for measuring restrained shrinkage. In this test, a steel angle, 39 inches in length and with cross-sectional dimensions of 1.5 x 2.75 inches, is filled with concrete. The length of time until the concrete cracks, the number of cracks, and the average width of cracks are recorded.

Fracture Energy

An important test measuring the fracture energy, G_F, of a concrete specimen is RILEM TC-50. The fracture energy of concrete can be useful in analyzing shrinkage cracking behavior because it can be characterized as the actual amount of energy needed to create a crack of unit area or fracture surface (Guo and Gilbert 2000). The test consists of placing a notched beam in three-point bending and measuring the displacement, δ_f, and the applied load, P, throughout the test. Using these values and an equation for the amount of work done by the load P, the weight of the beam, and other testing equipment, we can calculate the fracture energy (Guo and Gilbert 2000).

SUMMARY OF TEST METHODS

As seen above, researchers need to conduct tests in order to understand and model shrinkage behavior of concrete. A great deal of research has been directed toward developing an accurate and easy-to-implement test method to analyze restrained shrinkage cracking of concrete. AASHTO has adapted the ring test as a provisional test method, while RILEM has incorporated the cracking frame as a standard test. Currently, researchers are developing variations of the cracking frame by placing a vertical concrete beam under restraint at the ends through steel clamps. The end result of conducting the various tests is the selection of the best candidate mixtures for bridge decks.

CHAPTER 4 BRIDGE DECK CRACKING

In 1996, NCHRP Report 380, "Transverse Cracking in Newly Constructed Bridge Decks" (Krauss and Rogalla 1996), concluded that the transverse cracking was a result of a combination of thermal contraction, drying shrinkage, and concrete with a high modulus and little creep capacity. Bridge decks exhibit a high degree of restraint because of the composite nature of the deck and supporting girders. Forcing the deck and superstructure to act compositely means that no relative displacement can occur, thus restraining the concrete from shrinking.

STRESSES IN TRANSVERSE DECK CRACKING

All concrete shrinks and undergoes volumetric change with temperature. However, shrinkage and thermal loading alone are not enough to cause cracking. Length change in concrete must be restrained from such movements to induce stresses. Cracking is caused by the tensile stresses that are induced by restrained shrinkage.

Restraint

Deck restraint can come from either internal sources, such as reinforcement or aggregate, or external sources, such as supporting girders. Bridge decks are typically much longer in one direction than the other; because of this geometry, shrinkage tends to be more pronounced in the longitudinal direction. Again, the shrinkage is highly restrained and will develop stresses in the longitudinal direction of the deck. To relieve the shrinkage stresses, the deck will crack in the transverse direction, perpendicular to the stress.

Thermal Stresses

As described previously, thermal loads cause length change in concrete. Decks are particularly susceptible because they tend to be much longer in one direction. Length changes are more pronounced in that direction because thermal expansion is directly proportional to length. Thermal strains alone do not induce stresses; the deformation of the bridge deck must be restrained.

Restrained thermal contraction causes tensile stresses in deck elements and can compound the effects of shrinkage. However, thermal contraction usually occurs over a relatively short period of time. Creep cannot effectively relax thermal contraction because of the time needed to develop creep strains.

The discussion above assumes that there is a uniform or linear thermal gradient through the thickness of the deck. If a nonuniform temperature gradient is present when the concrete hardens, any applied thermal gradient will induce stresses regardless of restraint. These stresses develop because of the difference in the applied thermal gradient and the stress-free gradient. The difference in gradient may produce a nonuniform strain.

Shrinkage Stresses

Shrinkage stresses develop in a manner similar to that of thermal stresses. Concrete decks will tend to shrink in the longitudinal direction, which is restrained, and cracks will develop in the transverse direction perpendicular to the stress. Shrinkage tends to occur over a period of time much longer than that of thermal contractions; because of this time effect, creep can help to relieve some of the shrinkage stresses.

Traffic Stresses

Many bridge decks were reported to have cracked in the transverse direction before traffic was allowed on the structure in NCHRP Report 380 (Krauss and Rogalla 1996). Therefore, traffic-induced stresses are not considered to be a primary cause of transverse cracking. In simply supported structures, traffic loads will develop compressive stresses in the deck. Compressive stresses will not contribute to transverse cracks. In continuous bridges, traffic loads will induce tensile stresses in the deck over supports. However, transverse cracks in continuous bridges are not localized to areas near the support. Therefore, traffic is not likely to cause the cracks to form, but it will serve to open existing cracks.

Design Issues

As part of NCHRP Report 380 (Krauss and Rogalla 1996), a survey of bridges was performed to determine any relationships between design procedures and cracking in the field. During design, temperature and shrinkage stresses are rarely considered, and

temperature and shrinkage reinforcement is generally considered to be sufficient to control cracking. Presented below is a summary of the report findings.

Span Support and Continuity

In simply supported spans, temperature and shrinkage stresses are almost uniform along the length of the span. Simple supports allow free rotation and can accommodate the curvature that results from deck shrinkage. Conversely, continuous spans restrain the curvature of the deck at interior supports. This restraint affects the stresses and increases cracking near the supports.

Girder Effects

As previously described, a bridge deck acts compositely with its supporting girders. Transverse cracking would not occur without such girder restraint. However, decks that are designed not to be composite will still have a great deal of friction between the underside of the deck and the girders. Unless this friction was reduced, it would still provide enough restraint to produce transverse cracking.

Krauss and Rogalla reported that bridges supported by steel girders are cracked more than decks supported by concrete beams. They attributed this effect to the inability of the steel to shrink with the concrete and the higher elastic modulus of steel. Also, there is a marked difference between the coefficients of thermal expansion for concrete and steel. Additionally, steel is more thermally conductive than concrete and will react faster to a changing environment.

Girder size and spacing also affect restraint. Larger girders provide more restraint and therefore induce more cracking. Longer span bridges will likely have larger girders; the higher incidence of cracking on longer span bridges may be the effect of girder size rather than span length. As one would expect, more closely spaced girders provide more restraint as well.

Deck Design

The longitudinal stresses that lead to transverse cracking, which can be seen in Figure 6, are influenced by deck thickness, reinforcement cover, reinforcement spacing and size, embedded studs, and concrete strength.

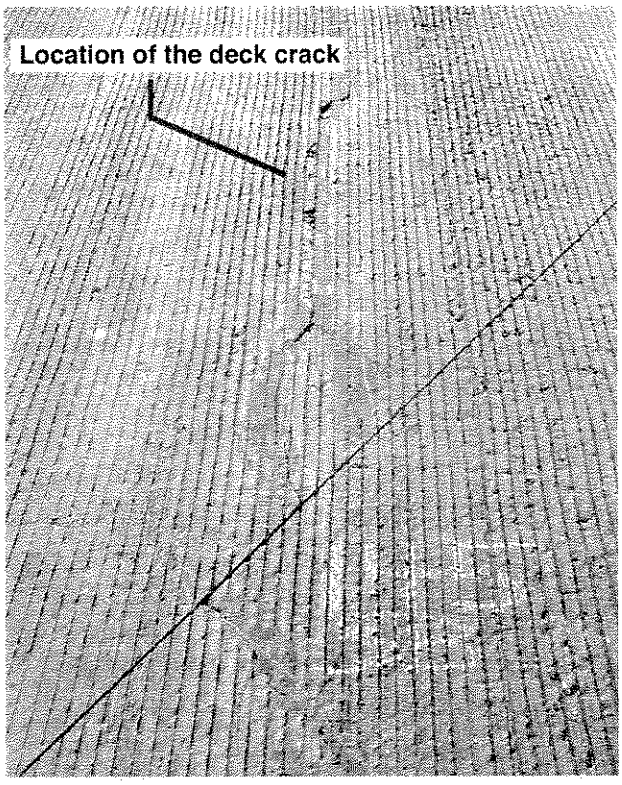

Figure 6 – Transverse deck crack

Thicker decks often develop smaller shrinkage stresses for the same amount of shrinkage. However, thicker decks are more prone to develop nonuniform shrinkage stresses, which in turn induce bending.

Krauss and Rogalla found that the concrete cover has an inconsistent effect on cracking. Increasing the cover reduces the ability of the reinforcement to distribute the shrinkage stresses. A larger number of smaller bars at a closer spacing are believed to reduce cracking. Epoxy-coated bars were found to produce larger cracks but fewer of them. This was attributed to the lower bond-slip strength of epoxy-coated bars as opposed to black bars.

Transverse deck cracks tend to develop directly above the transverse reinforcement. This effect is compounded if the top and bottom layers of bars lie directly over one another, producing a weakened plane. There is also evidence that cracks often propagate from the corners of prestressed, precast deck panels. The panels add restraint to the cast-in-place concrete in which they are embedded.

Concrete Strength

Higher-strength concrete is more susceptible to transverse cracking than concrete of a moderate strength. Higher-strength concrete typically has a larger amount of cement, which increases the shrinkage potential and heat of hydration. Also, the modulus of elasticity of higher-strength concrete is larger so for the same amount of strain a higher-modulus material will experience more stress.

Concrete Properties and Mix Proportions

The concrete properties provide the designer with the most ability to control and prevent shrinkage cracking. Although the girder size is more influential on transverse cracking, the span length generally dictates the girder size, whereas the concrete properties can be modified without serious negative consequences.

Mixture Proportions

Reducing the cement content increases creep but decreases the heat of hydration and the associated thermal stress. A lower cement content will therefore result in a mix that is less prone to cracking. Little correlation, if any, was found between the amount of time that passed before cracking occurred and water content. Concrete with higher water contents shrinks more, but an increase in creep tends to offset the increased shrinkage. Reducing the water-cement ratio increases strength and decreases free shrinkage. The increase in strength increases the modulus and, in turn, increases the cracking potential.

A minimum of cement paste should be recommended for bridge deck construction. A minimum amount of paste will decrease shrinkage because the paste is the component of concrete responsible for shrinkage. However, the decrease in paste volume will also decrease the creep, and there may be no net effect of minimizing the volume of paste. Therefore, there is no conclusive recommendation at this time.

Modulus of Elasticity and Creep

The combination of modulus and creep determines the stresses caused by the shrinkage strains. Both the modulus and the tensile strength of concrete are affected by the compressive strength. An increase in compressive strength will increase the tensile strength and the modulus of concrete. This increase means the concrete will have a

greater resistance to cracking and a greater stress driving the cracking. Also, higher-strength concrete tends to have a lower amount of creep. As mentioned before, creep serves to relax the stresses caused by shrinkage. The simplest way to decrease the concrete modulus is to decrease the compressive strength. To increase the creep potential, the volume of cement paste should be increased.

Concrete Strength

Creep is the controlling factor in resistance to shrinkage cracking. Compressive strength and creep are inversely proportional; higher-strength concrete tends to creep less. Increasing the compressive strength of concrete usually increases the stresses that result from restrained expansion more than it increases the tensile strength; the net effect is a higher cracking potential.

Aggregate

To reduce the thermal stresses produced by hydration, engineers should use a leaner concrete mix. Larger aggregate should be used to achieve this goal without sacrificing workability.

In addition, an aggregate with a low modulus, a low coefficient of thermal expansion, and high thermal conductivity should be used. The modulus of the aggregate is the most influential, because the concrete is mostly aggregate. Thus, a low modulus aggregate will produce a low modulus concrete, which is crack resistant.

Cement Type

We recommend cement that will produce less heat of hydration, e.g., Type II or Type IV. Type III (high early strength) should be avoided because of the large increase in the heat of hydration it produces. If Type III is to be used, care should be taken to minimize the amount of cement.

Silica Fume

NCHRP Report 410, "Silica Fume Concrete for Bridge Decks," states that "Cracking tendency of concrete is influenced by the addition of silica fume only when the concrete is improperly cured" (pg. 17). The report also discusses an increase in compressive

strength with the use of silica fume. This study did not focus on shrinkage cracking, so its results should not be accepted without question. An increase in elastic modulus is likely to increase the probability of cracking. This effect was experimentally shown by Krauss and Rogalla. They noted that restrained shrinkage rings (AASHTO PP34-99) that contained silica fume cracked 5 to 6 days earlier than similar specimens without silica fume.

Admixtures

Admixtures can adversely affect the shrinkage potential of concrete. For instance, water reducers can be used to reduce the paste volume and thereby enhance the creep capacity without the loss of workability. Set retarders can be used to delay set and to decrease the amount of heat of hydration. A lower heat of hydration will decrease the thermal shock on the hydrating concrete; however, overly long retardations will increase the potential for plastic shrinkage cracking. Proper curing is necessary with the use of a set retarder. Conversely, set accelerators increase the heat of hydration and early-age shrinkage. This combination will increase transverse shrinkage and the resulting cracking.

Shrinkage-reducing admixtures (SRAs) are also available. These admixtures reduce the drying shrinkage by reducing the surface tension of the water in the capillary pores. If the surface tension of the water is reduced, there is less tension transferred to the capillary walls, and thus less shrinkage. Laboratory evaluations (Folliard and Berke 1997) have shown a slight decrease in compressive strength when an SRA is used. Taking advantage of the water-reducing properties of SRAs can offset the decrease in strength.

Fiber Reinforcement

Steel Fibers

Steel fibers can affect the properties of concrete, but the reinforced properties depend on the percentage of fiber addition, the aspect ratio of the fibers, and the strength of the concrete paste. Longer fibers provide more strength but decrease workability. For this reason, fibers with an aspect ratio of less than 100 are commonly used.

Although there is considerable variation in the data, steel fiber reinforced concrete (SFRC) has been shown to increase the tensile strength, flexural strength, and

compressive strength of concrete. Tests have shown that steel fibers do not affect the shrinkage strain of concrete, but the fibers can reduce the amount of cracking associated with the shrinkage strain.

Polypropylene Fibers

Low fiber volumes can significantly reduce the plastic shrinkage of concrete. For low-volume fiber reinforcement, fiber volume is typically 0.1%–0.3%. At low dosages such as these, the fibers have little, if any, effect on the properties of the hardened concrete. Some manufacturers of polypropylene fibers have claimed that the addition of a low volume of fibers significantly reduces shrinkage cracking. These claims have not been supported by laboratory evaluations, and such claims should be carefully examined.

However, high volumes of fiber, generally greater than 2%, can increase the ductility and toughness of concrete. At high volumes, polypropylene fibers can be used to prevent shrinkage cracking. The shrinkage stress produced in the concrete is transferred to the fibers, which can better withstand the tensile stresses than the concrete can.

High-Performance Concrete

High-performance concrete (HPC) is concrete with superior strength, durability, and dimensional stability. However, there is evidence that HPC bridge decks exhibit significantly more shrinkage cracking that traditional concrete decks. HPC has a higher paste volume; the increase in cracking is attributed to the increase in shrinkage without an increase in creep from the large paste volume. Additionally, HPC often contains silica fume to reduce permeability. Wiegrink et al. (1996) demonstrated that creep decreased with increasing amounts of silica fume.

HPC will have a higher tensile strength, but the elastic modulus of the HPC will also be higher. The combination of higher tensile strength and higher modulus will still produce shrinkage cracking. With a higher modulus, the tensile stresses for a given amount of deformation will be higher than in a traditional concrete.

Additionally, HPC often exhibits faster strength gain than traditional concrete. The faster strength gain amplifies the effects of the thermal shock resulting from heat of hydration. As described above, if the concrete hardens before it cools to ambient temperatures, the stress-free state will be at the higher temperature. Therefore, the

temperature experienced by the bridge will be lower than that at the stress-free state, and a length contraction will occur and induce tension in the deck.

Table 2 summarizes the effects of the above factors on deck restraint.

Table 2 – Factors affecting deck restraint (Krauss and Rogalla 1996)

Factors	Effect			
	Major	**Moderate**	**Minor**	**None**
Design				
Restraint	✓			
Continuous/simple spans		✓		
Deck thickness		✓		
Girder type		✓		
Girder size		✓		
Alignment of top and bottom reinforcement steel		✓		
Form type			✓	
Concrete cover			✓	
Girder spacing			✓	
Quantity of reinforcement			✓	
Reinforcement bar sizes			✓	
Dead-load deflections during casting			✓	
Stud spacing			✓	
Span length			✓	
Bar type (epoxy-coated vs. black)			✓	
Skew			✓	
Traffic volume				✓
Frequency of traffic-induced vibrations				✓
Materials				
Modulus of elasticity	✓			
Creep	✓			
Heat of hydration	✓			
Aggregate type	✓			
Cement content and type	✓			
Coefficient of thermal expansion		✓		
Paste volume — free shrinkage		✓		
Water-cement ratio		✓		
Shrinkage-compensating cement		✓		
Silica fume admixture		✓		
Early compressive strength			✓	
HRWRA			✓	
Accelerating admixtures			✓	
Retarding admixtures			✓	
Aggregate size			✓	
Diffusivity			✓	
Poisson's ratio			✓	
Fly ash				✓
Air content				✓
Water content				✓

Table 2 – Factors affecting deck restraint continued

Construction				
Weather	✓			
Time of casting	✓			
Curing period and method		✓		
Finishing procedures		✓		
Vibration of fresh concrete			✓	
Pour length and sequence			✓	
Construction loads				✓
Traffic-induced vibrations				✓

CONCRETE PLACEMENT

Construction practices can affect the cracking potential of a deck. Improper finishing as well as the environmental conditions at the time of placement can increase the effects of early transverse cracking.

Weather and Time of Placement

To reduce cracking, concrete should be placed during cool weather. Placing concrete in cool weather will slow the hydration reaction and reduce the heat produced by the exothermic hydration process. As discussed previously, it is advantageous to reduce the heat of hydration to minimize early and residual thermal stresses. Placing concrete during mild weather, when the temperature extremes associated with the diurnal cycle are less pronounced, will help to reduce any early thermal loading.

Wind speed should also be carefully monitored. If the winds are sufficiently high, they can cause an increase in the evaporation rate from the surface of the concrete. If the evaporation increases, the propensity for plastic shrinkage cracking will also increase. Construction specifications should specify windbreaks or fogging if the wind speed exceeds the accepted limit of 0.2 $lb/ft^2/hr$. This value may need to be halved for more exotic concrete mixes containing silica, HRWRA, or any other components that may decrease the concrete's ability to bleed.

The Portland Cement Association (PCA) recommends that the concrete temperature should be held below 80 °F and above 60 °F. The upper limit is established to prevent large thermal stresses during early strength gain. To reduce temperatures, concrete suppliers should shade the aggregates before mixing and replace a portion of the mix

water with ice. Water misting is also recommended to reduce the evaporation during hot-weather concreting.

Finishing

Proper finishing can reduce the risk of early shrinkage cracking. The concrete should be thoroughly consolidated and smoothed with a float. Final floating should be delayed until the concrete has finished bleeding. Finishing before the concrete has bled will create a weakened crust on the surface that is susceptible to scaling. If finishing is to be delayed for any reason, mist should be applied to the deck using a fogging nozzle.

CURING

The first few days after concrete placement are critical to its strength, durability, permeability, and volume stability. All of these properties are enhanced with proper curing techniques. Curing immediately after strike off can reduce the probability that plastic shrinkage cracks will form.

Plastic Shrinkage Cracking

Plastic shrinkage cracks occur before the concrete has hardened if environmental conditions are poor, i.e., high temperature, low humidity, and high wind. Plastic shrinkage cracks may be large, but they are seldom structurally significant. They do, however, allow the ingress of moisture, which may corrode the reinforcing steel.

To reduce plastic shrinkage, it is necessary to reduce the evaporation at the exposed concrete surface. This may be done with membrane curing, fogging, or wet matt curing. Polyethylene sheeting is also effective at reducing the loss of bleed water through evaporation, but the sheeting can be cumbersome and impractical.

Continuous Moist Curing

Moist curing consists of water mist, water ponding, or saturated coverings. Any coverings should be pre-wetted so that no moisture is wicked up from the concrete. Moist curing will adequately mitigate evaporation, but it must be applied for a sufficiently long time to allow hydration to proceed to an acceptable level. Plastic sheet materials can also be used to provide proper curing to concrete. One example of this type is polyethylene film, as illustrated in Figure 7.

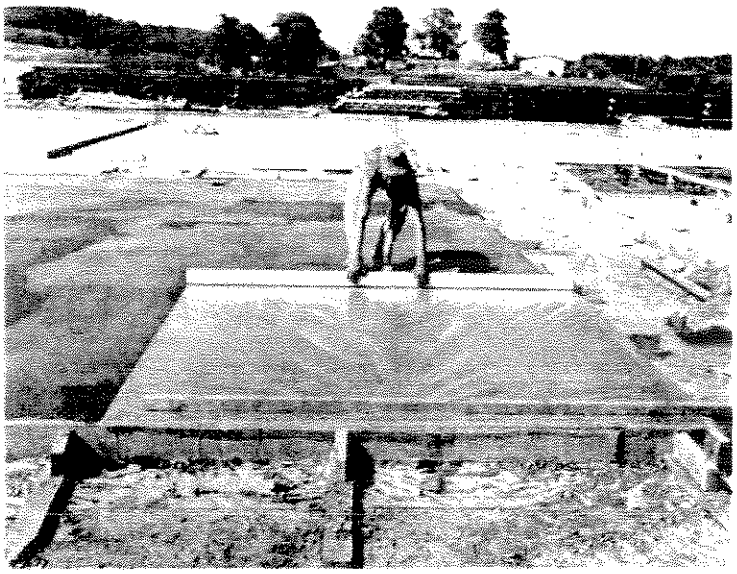

Figure 7 – Continuous moist curing (polyethylene film) (Kosmatka 1988)

Membrane Curing

Membrane curing consists of spraying a compound onto the surface of the concrete to reduce water losses. Membranes can be applied sooner than wet matts, but they will not cure as well as the matts. The membranes can sufficiently limit the evaporation rates to acceptable limits, but membrane coverage often is not uniform, allowing greater evaporation in areas of poor coverage.

CHAPTER 5 METHODS OF CONTROLLING SHRINKAGE CRACKING

Specific methods to properly control shrinkage cracking have been developed and researched. Conventional methods, which include proper material selection, mixture proportioning, and good construction techniques, can be used to a certain extent to control and limit the shrinkage cracking of concrete bridge decks. Unfortunately, because these methods are hard to control, and environmental conditions can vary so much, the shrinkage cracking cannot be entirely prevented. For example, bridge decks in hot, dry, and windy conditions can have much higher rates of water evaporation, thus making them more susceptible to shrinkage cracking. Innovative methods of controlling shrinkage cracking have been found in literature and developed by numerous researchers to help control and eliminate shrinkage cracking. These include using fiber-reinforced concrete, shrinkage-reducing admixtures, shrinkage-compensating concrete, and extensible concrete. Both categories of methods are summarized in Table 3.

Table 3 – Methods of controlling drying shrinkage

Conventional	• Proper Material Selection
	  ○ Aggregates
	  ○ Cement Type
	  ○ Admixtures
	
	• Mixture Proportioning
	  ○ Cement Content
	
	• Construction Techniques
	  ○ Girders
	  ○ Precast Panels
	  ○ Formwork
	  ○ Curing

Innovative	• Fiber Reinforcement
	  ○ Polypropylene
	  ○ Steel
	
	• Shrinkage-Compensating Concrete
	
	• Shrinkage-Reducing Admixtures
	
	• Extensible Concrete

CONVENTIONAL METHODS

Shrinkage cracking in concrete is currently being controlled through conventional methods, which consist of the proper selection of materials and concrete mixtures, along with good construction techniques.

Aggregates

The type of aggregate used in concrete mixtures, as well as the aggregate content, can influence the amount of shrinkage in concrete. Krauss and Rogalla (1996) found that "aggregate type was the most significant [concrete material] factor affecting when concrete cracked" (pg. 24). Specifically, limestone-aggregate concretes proved to be the most resistant to cracking, while Eau Claire river gravel had the shortest time-to-cracking of the aggregates tested. Burrows also studied the effect of the type of aggregate used on the drying shrinkage of concrete. Again,

limestone was found to be one of the aggregates exhibiting the least drying shrinkage while, in this study, sandstone exhibited the highest amount of drying shrinkage, as seen in Table 4. The amount of aggregate used in a concrete mixture can also help reduce shrinkage. Research has shown that a higher aggregate content can help reduce shrinkage.

Table 4 – Aggregate type related to drying shrinkage (Burrows 1998)

Effect of type of aggregate on the drying shrinkage of concrete	
Aggregate	One-year shrinkage (percent)
Sandstone	.097
Basalt	.068
Granite	.063
Limestone	.050
Quartz	.040

Cement Content and Type

The amount of cement proportioned in concrete mixtures has an impact on the amount of shrinkage that concrete will undergo. Specifically, bridge deck cracking has been more prevalent when higher cement contents have been used. Bloom and Bentur (1995) concluded that mixes containing higher cement content cracked much sooner than those with lower cement contents. Krauss and Rogalla (1996), using a ring shrinkage test, also found that cracking occurred sooner as the cement content of the concrete mixes was increased. In the same report, the authors attributed the increased occurrence of bridge deck cracking to AASHTO's 1973 action of increasing the cement content from 6 to 6.5 sacks per cubic yard.

Directly related to the amount of cement in a concrete mixture proportion is the actual water-cement ratio, which can also influence shrinkage behavior in concrete. Krauss and Rogalla found that "concrete with more water shrinks and creeps more than concrete with less water, but it may not crack sooner because it has higher creep" (pg. 26). Burrows

contends that although concrete mixes with lower water-cement ratios produce stronger concrete, that same concrete can be much more vulnerable to cracking (1998).

The type of cement used also plays an important role in reducing shrinkage cracking. Krauss and Rogalla noted that cements that are ground finer and have higher sulfate contents increase the early strength of concrete while also increasing the early modulus of elasticity and heat of hydration. For example, Type III cement could increase the risk of cracking because of the rapid early strength gains. Burrows also noted that the use of the compound tricalcium silicate (C_3S), which has a high rate of hydration, produces higher stresses in the deck during cooling, as a result of thermal contraction.

As mentioned before, HPC has been found to cause a large number of shrinkage cracks in bridge decks. HPC has been defined as concrete with a very high strength and a low water-cement ratio of 0.35 (Burrows 1998). This high early strength, and other guidelines for HPC "guarantee severe cracking from the self-stresses of thermal contraction, autogenous shrinkage, and drying shrinkage" (pg. 31).

Admixtures

Fly ash, silica fume, set retarders, and accelerators are all admixtures that have been investigated for shrinkage by a number of researchers.

Fly ash has been found to reduce early concrete temperatures and the rate of strength gain, thus reducing deck cracking (Paillere et al. 1989). The process of using fly ash to replace cement is referred to as the creation of "extensible concrete" and is described in detail following this section.

Silica fume, a by product of silicon metal or ferrosilicon alloys in electric arc furnaces, has been found to increase the cracking of bridge decks (NCHRP Report 410). The silica fume product has an average fineness of about two orders of magnitude finer than portland cement, which causes the bleeding rate of concrete to decrease, and the subsequent water loss resulting from evaporation cannot be replaced. The NCHRP report found silica fume to be a problem with cracking tendency specifically when the concrete is not cured properly. Krauss and Rogalla contend that while some researchers have found bridge deck cracking to be caused by silica fume, the issue is still in question.

Retarders have not been proven either to be the cause of concrete deck cracking or to help reduce the risk of thermal cracking. Plastic cracking could be caused by the addition

of retarders, while retarders have also been found to reduce the risk of thermal cracking by reducing early heat of hydration in concrete.

Construction Techniques

Construction practices and details can play a large role in affecting early transverse cracking. The type of girders and other construction methods used, along with curing and the environmental conditions at the time of bridge deck placement, can all factor into the cracking tendencies of the bridge decks.

Actual bridge design, including the type of girders used, along with other details, can significantly affect shrinkage stresses. The analytical studies performed by Krauss and Rogalla found that decks supported by steel girders usually have higher risks of transverse deck cracking and higher tensile stresses than decks with concrete girder construction. Concrete girders could induce severe localized transverse deck cracking over interior supports. Precast concrete panels, such as those commonly used in the state of Texas, have been known to cause cracking problems near the supports of the panels, where they meet the concrete girders below.

Curing also can cause shrinkage cracking if proper procedures are not followed. Tan and Gjorv (1996) maintain that durable concrete is brought about through proper curing, which includes both the length of time that moist curing is applied and the temperature of curing.

Curing can especially affect bridge decks constructed with high cement content, low water-cement ratios, and HPC. Krauss and Rogalla found that the time-to-cracking of these types of concrete was significantly extended when wet curing was increased to 60 days. The Standard Specification manual, published by TXDOT in 1993, establishes a period of four to ten days for curing all concrete. The curing is accomplished by either form curing (using stay-in-place forms) or water curing. Water curing includes wet matt curing, water spray, ponding, or membrane curing.

In addition to the construction practices and curing methods used, the environmental conditions play a vital role in determining the crack resistance of bridge decks. Concrete exposed to hot, dry, and windy conditions can experience shrinkage cracking from the high rate of evaporation of water from within the concrete. Increases in creep of a concrete can be attributed to higher temperatures; therefore, the temperature effects on

shrinkage, creep, and cracking must be taken into account. As previously mentioned, the ACI Committee 209 Report addresses this issue when calculating shrinkage and creep.

INNOVATIVE METHODS

Because of the extreme variance of the conventional methods used to control drying shrinkage, innovative methods should be used to help reduce cracking tendencies of concrete. These include fiber-reinforced concrete, shrinkage-reducing admixtures, shrinkage-compensating concrete, and extensible concrete.

Fiber-Reinforced Concrete

Many studies have shown that adding fibers to concrete significantly reduces shrinkage cracking. Various parameters that were investigated include the addition of fibers at low volumes as compared to high volumes, as well as the different types of fibers to be used. Figure 8 shows two different types of polypropylene fibers, with the more durable fiber used for bridge deck applications on the left.

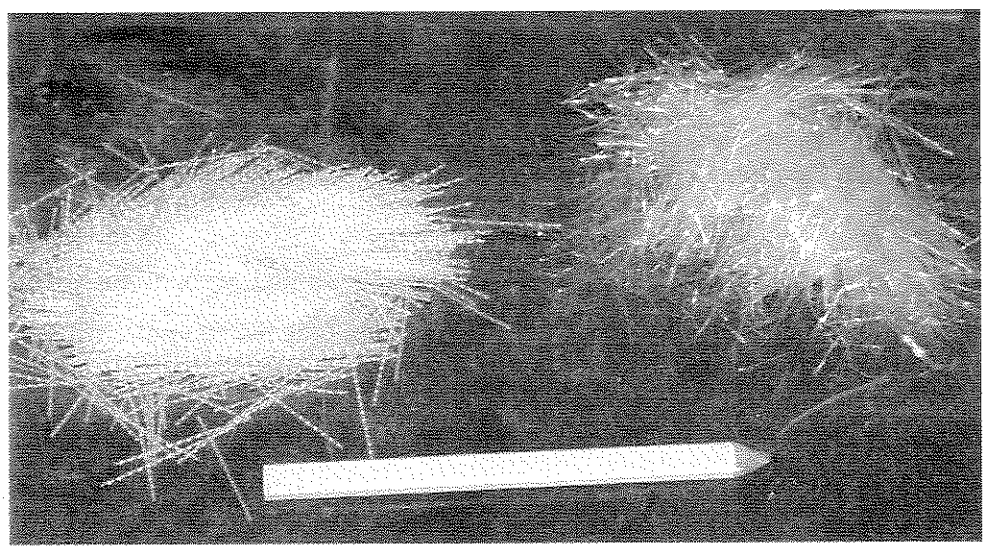

Figure 8 – Polypropylene fibers

Research has shown that when low amounts of either polypropylene or nylon fibers (.1% by volume) are added to concrete, plastic shrinkage cracking in concrete can be prevented (Folliard and Simpson 1999). However, other properties of concrete, including drying shrinkage, are unaffected by the low volume of fibers added to concrete

(Gryzbowski and Shah 1990). The same paper (Shah) found that the addition of fibers as low as .25% by volume substantially reduced crack widths resulting from restrained drying shrinkage. Both steel and polypropylene fibers, when added to concrete at higher volumes, have been found to significantly reduce drying shrinkage cracking. The addition of fibers also improves the structural properties of concrete, including flexural strength and toughness, fatigue resistance, and impact resistance.

Shrinkage-Reducing Admixtures

A great deal of research has been performed regarding the development of SRAs used to control shrinkage cracking of concrete. These chemical admixtures, which are added to concrete at dosages of approximately 1–2 gallons per yd^3, work by lowering the surface tension of the pore water inside hardened concrete (Folliard and Berke 1997). As previously described in this report, the pore water evaporates from capillary pores in the hardened concrete during drying, and the tension in the liquid is transferred to the capillary walls, resulting in shrinkage. Any stresses generated during drying are proportional to the surface tension of the pore water solution. This surface tension is lowered by SRAs, thus reducing the overall drying shrinkage. Therefore, there are fewer tendencies for shrinkage and resultant stresses to occur in the concrete when the pore water initially evaporates. SRAs affect the nature of the pore water, rather than limiting or reducing the amount of water from concrete during drying. The actual mechanism of shrinkage and stress generation is thereby affected by SRAs.

The same study by Folliard and Berke (1997) investigated the use of SRAs in typical bridge deck concrete. The results showed that SRAs reduced the total amount of shrinkage cracking while increasing the time it took for the concrete to crack. Additionally, Shah et al. (1997) showed that the addition of SRAs considerably reduced free shrinkage of concrete while significantly delaying the cracking of the concrete subjected to restrained shrinkage.

Shrinkage-Compensating Concrete

Shrinkage-compensating cement is an innovative material that causes expansion of concrete during curing, which in turn reduces the effects of drying shrinkage. If the expansion is properly restrained, the concrete will be subjected to compression the first

few days after concrete placement. Pittman et al. (1999) found that this restraint can substantially reduce net shrinkage by testing a number of different shrinkage-compensating concrete mixtures. Although the shrinkage-compensating concrete will shrink as much as normal concrete once exposed to drying conditions, the net shrinkage will be negligible because the concrete started out with an initial expansion. Folliard et al. (1994) found that the shrinkage-compensating concrete will expand under restraint by about .04–.08 % during the moist-curing period. Shrinkage-compensating concrete is typically designed so that residual expansion will continue to be present in the concrete after hydration, reducing shrinkage stresses altogether.

Construction techniques involving shrinkage-compensating concrete are critical for development of proper expansion. Moist curing for a period of at least 7 days has been suggested for the concrete. Pittman et al. (1999) noted that the shrinkage-compensating concrete bar specimens tested exhibited significant early expansion during the first 7 days, as long as moist curing was maintained for this period. Also noted in this study was the comparison of initial expansion from Type K cement, used for shrinkage-compensating concrete, as compared to Type I cement. When proper curing was used, Type K cement expanded up to four times as much as the Type I cement.

The mechanism of expansion in the shrinkage-compensating concrete is a result of the early formation and stability of ettringite. The ettringite crystals need water to expand, and therefore moist curing must provide this water, or else minimal expansion will result. As mentioned previously, the ACI Committee 223 Report presents guidelines ensuring that the expansion can occur. In addition, the report presents information about the amount and location of reinforcing steel needed to provide proper restraint to the shrinkage-compensating concrete during curing.

Extensible Concrete

Extensible concrete is a term that refers to a combination of factors that are useful for reducing the cracking in concrete (Mehta, 1993). Basically, some of the conventional materials and methods mentioned previously can be used in an innovative manner to achieve this type of behavior.

Specific emphasis is on the following properties:

- Low elastic modulus
- Low heat of hydration
- Low strength (low cement content)
- High creep
- High tensile strength and strain capacity
- High volumes of fly ash

A typical extensible concrete would have a high volume of fly ash, low cement content, and a high water-cement ratio. These factors would produce a low heat of hydration, thereby reducing thermal stresses in the concrete, while also producing a low elastic modulus and high creep, minimizing shrinkage cracking. Burrows (1998) reinforced this idea by recommending the concrete industry move toward producing concrete with better extensibility, or resistance to cracking, by lowering the fineness, alkali, and C_3S of the cement. A possible disadvantage with this method is the slower rate of construction, but delays can be minimized if this process is properly scheduled in the construction scheme. This method, if further researched and implemented, could prove to be economically feasible, possibly lowering the material costs for various jobs, depending on the availability of fly ash.

One property of extensible concrete that was briefly mentioned before is the use of high-volume fly ash (HVFA) in blended cements. Bouzoubaâ et al. (1998) states that in the 1980s, Canada Centre for Mineral and Energy Technology (CANMET) developed HVFA, by which 55% to 60% of the portland cement is replaced. The researchers conducted numerous tests on this concrete, and one of the conclusions was that the drying shrinkage strains were low. This result was attributed to the low unit water content used in the mixtures. The resistance to freezing and thawing cycles was also investigated, and the test prisms were found to perform excellently when subjected to the freezing and thawing cycles. The resistance to chloride-ion penetration was also found to be significantly higher for the fly ash concrete than for the control concrete in the test.

CHAPTER 6 CONCLUSIONS

Restrained shrinkage cracking has been found to be a problem throughout the country. The causes of the cracking include shortcomings in materials, design practices, and construction techniques.

Careful selection of materials and mixture proportions can prevent cracking to some degree. Designers should be careful to specify materials with long-term performance in mind. Mixture proportions should be chosen to allow creep to occur enabling the structure to absorb shrinkage and thermal stresses without cracking. Further research into extensible concrete needs to be conducted. Extensible concrete has been a promising solution in laboratory evaluations, but we must conduct more research to investigate possible construction scheduling difficulties as well as the behavior of the material itself.

Further research also needs to be conducted on the laboratory tests themselves. Currently, there are several tests to determine the shrinkage characteristics of concrete. It is likely that no single test will accurately predict a concrete's shrinkage potential. A standardized battery of tests needs to be identified and put into widespread use; the battery of tests will need to be compared to field observations to improve their accuracy.

With the results of standardized testing, designers will have adequate tools to select materials for durability. Specifications could then be written with knowledge of the impact of cement content, water-cement ratio, admixtures, and strength gain. The concrete properties are the most influential in determining the shrinkage cracking potential. Sensibly choosing the correct material could eliminate some of the cracking problems.

Material properties also need to be considered during the structural detailing process. Some structural details, such as precast panels, are known to induce cracking. Details known to cause cracking need to be reevaluated in light of their impact on the material response. A large survey of the state of current bridges would need to be undertaken to determine problematic details.

Furthermore, full-scale testing should be performed to examine such details so that they may be improved. Such full-scale tests would incorporate the effects of construction practices.

Problems with construction techniques are known to influence cracking. The solutions to improper construction are also well documented. However, proper construction techniques are often sacrificed to expedite a project's completion. The results of a combination of improved materials specification, detailing, and construction techniques would be bridge decks which are less likely to crack, are more durable, and would require less maintenance.

REFERENCES

1. ACI Committee 209, "Prediction of Creep, Shrinkage, and Temperature Effects in Concrete Structures," ACI 209R-92, American Concrete Institute, 1999.

2. ACI Committee 223, "Standard Practice for the Use of Shrinkage Compensating Concrete," ACI 223-98, American Concrete Institute, 1998.

3. Bloom, R., and Bentur, A., "Free and Restrained Shrinkage of Normal and High-Strength Concretes," *ACI Materials Journal*, Vol. 92, No. 2, March–April 1995.

4. Bouzoubaâ, N., Zhang, M.H., Bilodeau, A., and Malhotra, V.M., "Mechanical Properties and Durability of Concrete Made with High Volume Fly Ash Blended Cements," *Fly-Ash, Silica Fume, and Slag*, CANMET, Vol. I, pp. 449–474, 1998 (ed.: V.M. Malhotra).

5. Breitenbücher, R., "Investigation of Thermal Cracking with the Cracking Frame," *Materials and Structures*, Vol. 23, pp. 172–177, 1990.

6. Burrows, R.D., *The Visible and Invisible Cracking of Concrete*, American Concrete Monograph No. 11, 1998.

7. Folliard, K.J., and Berke, N.S., "Properties of High-Performance Concrete Containing Shrinkage-Reducing Additives," *Cement and Concrete Research*, Vol. 24, No. 3, pp. 424–432, 1997.

8. Folliard, K.J., Ohta, M., Rathje, E., and Collins, P., "Influence of Mineral Admixtures on Expansive Cement Mortars," *Cement and Concrete Research*, Vol. 27, No. 3, pp. 424–432, 1994.

9. Folliard, K.J., and Simpson, B.T., "Low-Volume Polymeric Fiber-Reinforced Concrete Containing Shrinkage-Reducing Additives," *Cement and Concrete Research*, Vol. 27, No. 9, pp. 1357–1364, 1999.

10. Guo, X.H, and Gilbert, R.I., "The effect of Specimen Size on the Fracture Energy and Softening Function of Concrete," *Materials and Structures*, Vol 33, pp. 309-316, 2000.

11. Grzybowski, M., and Shah, S.P., "Shrinkage Cracking of Fiber-Reinforced Concrete," *ACI Materials Journal*, 138–147, March–April 1990.

12. Kosmatka, Steven H., and Panarese, William C., "Design and Control of Concrete Mixtures," Portland Cement Association, Stokie, Ill. 1988.

13. Kovler, K., Sikuler, J., and Bentur, A., "Restrained Shrinkage Tests of Fibre-Reinforced Concrete Ring Specimens: Effect of Core Thermal Expansion," *Materials and Structures*, Vol. 26, pp. 231–237, 1993.

14. Krauss, P.D., and Rogalla, E.A., "Transverse Cracking in Newly Constructed Bridge Decks," National Cooperative Highway Research Program (NCHRP) Report 380, Transportation Research Board, 1996.

15. Mehta, P.K., and Monteiro, P., *Concrete – Structure, Properties, and Materials*, The McGraw-Hill Companies, Inc., New York, 1993.

16. Paillere, M., Buil, M., and Serrano, J.J., "Effect of Fiber Addition on the Autogenous Shrinkage of Silica Fume Concrete," *ACI Materials Journal*, Vol. 86, No. 2, March–April 1989.

17. Pittman, D.W., Ramey, G., Webster, G., and Carden, A., "Laboratory Evaluation of Concrete Mixture Designs Employing Type I and Type K Cement," *Journal of Materials in Civil Engineering*, Vol. 11, Issue 2, pp. 144–150, 1999.

18. Poston, R.W., Kesner, K.E., Emmons, P.H., and Vaysburd, A.M., "Performance Criteria for Concrete Repair Materials," Technical Report REMR-CS-57, U.S. Army Corps of Engineers, 1998.

19. Shah, P.S., Marikunte, S., Yang, W., and Aldea, C., "Control of Cracking with Shrinkage-Reducing Admixtures," *Transportation Research Record*, 1574, pp. 25–36, 1997.

20. Springenschmid, R., *Thermal Cracking in Concrete at Early Ages*, E&FN Spon, London, 1994.

21. Tan, K., and Gjorv, O., "Performance of Concrete Under Different Curing Conditions," *Cement and Concrete Research*, Vol. 26, No. 3, pp. 355–361, 1996.

22. Weiss, W.J., Yang, W., and Shah, S.P., "Shrinkage Cracking – Can it be Prevented?" *Concrete International*, pp. 51–55, April 1998.

23. Weiss, W.J., Yang, W., and Shah, S.P., "Shrinkage Cracking of Restrained Concrete Slabs," *Journal of Engineering Mechanics*, Vol. 124, pp. 7–12, 1998.

24. Whiting, D., and Detwiler, R., "Silica Fume Concrete for Bridge Decks," NCHRP Report 410, Transportation Research Board, 1998.

25. Wiegrink, K., Marikunte, S., and Shah, S., "Shrinkage Cracking of High-Strength Concrete," *ACI Materials Journal*, Vol. 93, No. 2, September–October 1996.

APPENDIX A

ASTM AND AASHTO
TEST SPECIFICATIONS